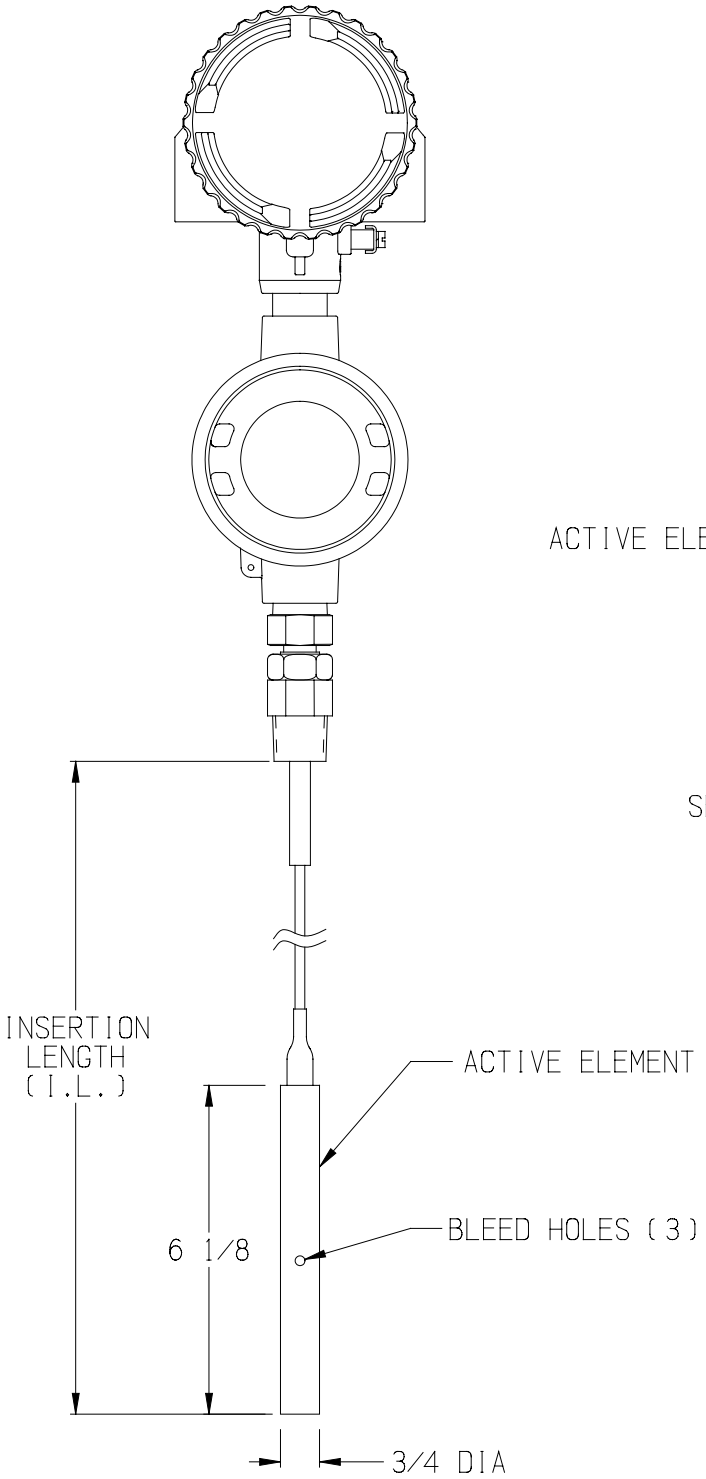

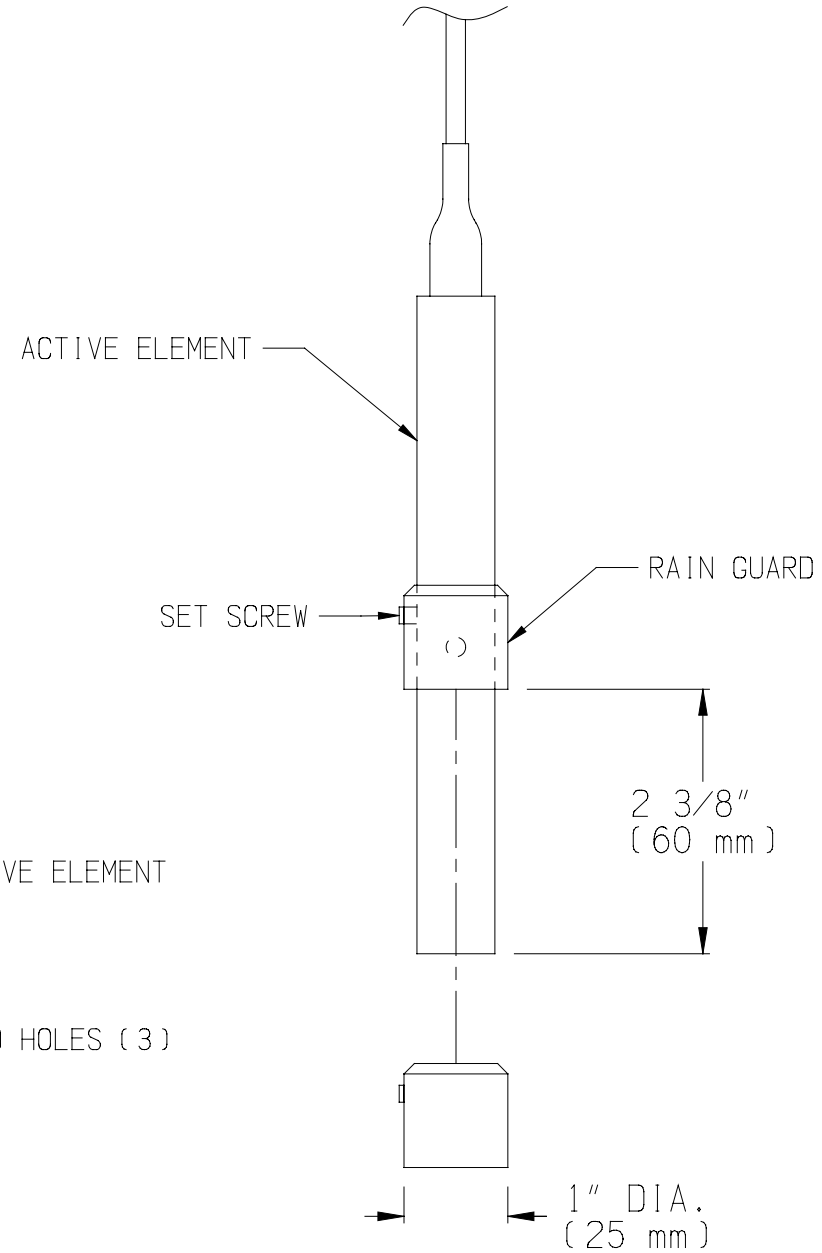

RAIN GUARD
P/N 775-0829-040
QUANTITY 2

INSTALLATION INSTRUCTIONS:

1. SLIDE ONE RAIN GUARD ONTO THE ACTIVE ELEMENT TO COVER THE THREE BLEED HOLES.
2. POSITION THE RAIN GUARD 2 3/8" (60 mm) FROM THE BOTTOM END OF THE ACTIVE ELEMENT.
3. TIGHTEN THE SET SCREW TO SECURE THE RAIN GUARD IN PLACE. USE 5/64" HEX WRENCH.

CERTIFIED by ____
PO # ____
ENG ____
USER ____
DE # ____

ISS.	EDO/DSR NO.	APP'D	DATE
2	8-16-102	JEN	9-14-16
1	12-15-109	JEN	2-11-16

COPYRIGHT 2016
AMETEK DREXELBROOK

SCALE NONE
UNLESS OTHERWISE STATED
ALL DIMENSIONS IN INCHES (MM)

DR. JEN 9-9-16
CK. THP 9-14-16

AMETEK®
DREXELBROOK
205 KEITH VALLEY RD
HORSHAM, PA 19044-9986
215-674-1234
FAX 215-674-2731

RAIN GUARD FOR
700-0005-594
SENSING ELEMENT

SHEET 1 OF 2

700-0005-594-CD3 ISS. 2

NO. 700-0005-594-CD3 SHT 1 OF 2

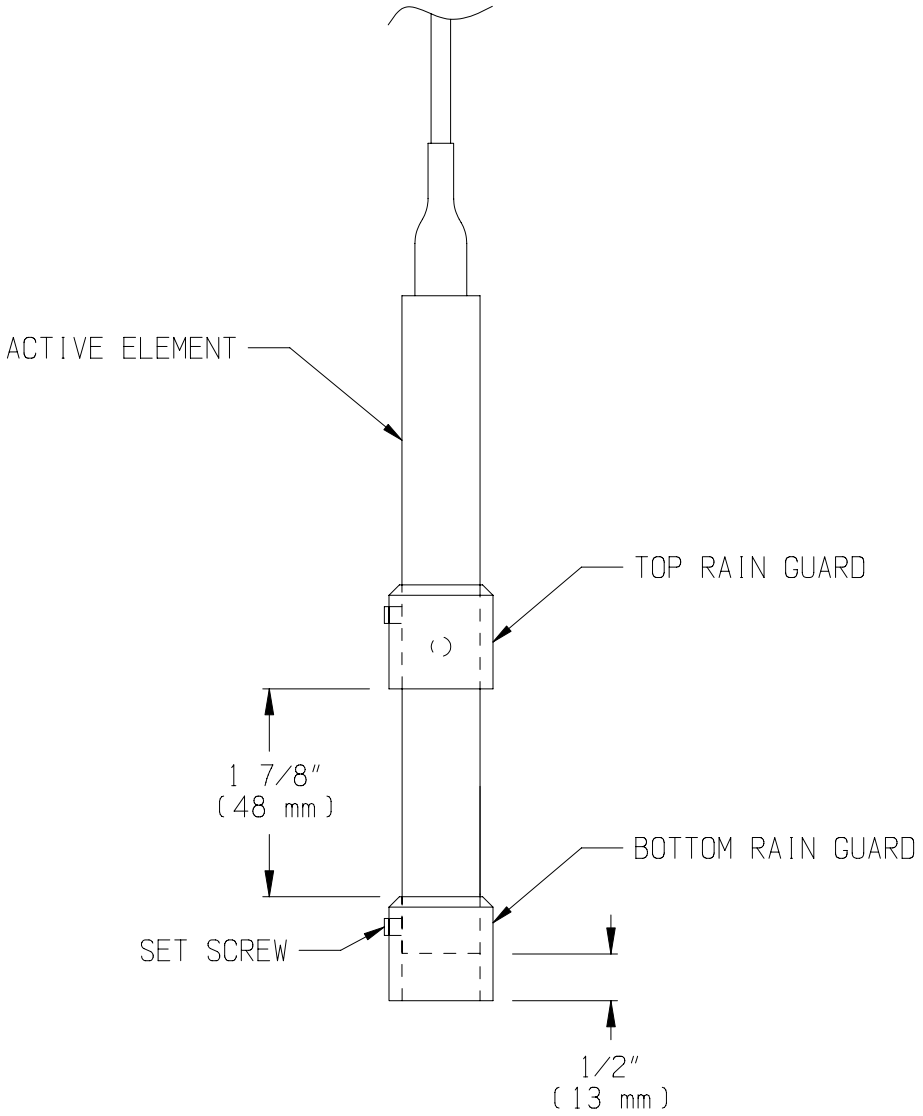

INSTALLATION INSTRUCTIONS: (CONTINUED FROM SHEET 1)

4. SLIDE THE BOTTOM RAIN GUARD ONTO THE ACTIVE ELEMENT TO EXTEND 1/2" BELOW THE END OF THE ACTIVE ELEMENT.
5. POSITION THE BOTTOM RAIN GUARD AS SHOWN ABOVE AND TIGHTEN THE SET SCREW TO SECURE THE RAIN GUARD IN PLACE. USE 5/64" HEX WRENCH.

ISS.	EDO/DSR NO.	APP'D	DATE
2	9-15-102	JEN	9-14-16
1	12-15-109	JEN	2-11-16

CERTIFIED by ____
PO # ____
ENG ____
USER ____
DE # ____

COPYRIGHT 2016
AMETEK DREXELBROOK

SCALE NONE
UNLESS OTHERWISE STATED
ALL DIMENSIONS IN INCHES (MM)

DR. JEN 9-9-16
CK. THP 9-14-16

AMETEK® DREXELBROOK
205 KEITH VALLEY RD
HORSHAM, PA 19044-9986
215-674-1234
FAX 215-674-2731

RAIN GUARD FOR
700-0005-594
SENSING ELEMENT

SHEET 2 OF 2

700-0005-594-CD3 ISS. 2

NO. 700-0005-594-CD3 SHT 2 OF 2